Section 66

MECHANICAL

SHUTTLE

PRINTED IN U.S.A.

SHUTTLE CONTROL COVER
With Linked Lever
(Refer to Figure 1)

There are two types of control covers used, one for tractors with shuttle only and one for tractors with shuttle and dual range. The servicing of the dual range part of the cover is covered in Section 67 of this Service Manual.

Removal and Disassembly

1. Remove bolt (1) with lockwasher from shuttle lever (3) and disconnect linkage assembly (2).
2. Remove the four bolts (4) with lockwashers from cover.
3. Tap cover upward lightly to remove. The locating dowels (5) and (6) will remain in cover. Remove gasket (7).
4. Remove lockwires and setscrews (8). Drive the shuttle rail (9) out and remove detent ball (10), spring (11), fork (12), lug (13) and selective spacer (14).
5. Remove the pipe plug (15) in top of cover and using a punch drive the roll pin (16) down and out of the cover.
6. The lower shuttle lever (3) is splined to the fork lever (17) and can be pulled out of cover.
7. Drive out lever seal (18).

Inspection

Inspect the shuttle fork, rail, fork lever and detent ball for excessive wear or roughness.

Inspect the detent spring (11).

Spring Specifications:

Total coils	8
Wire diameter	.072"
I.D. diameter	25/64"
Free length	1"
Compression to 13/16"	35 to 38 Lbs.

Assembly and Installation

1. Install new oil seal (18) with lip inward, until it bottoms in cover.
2. While holding fork lever (17) in a vertical position inside of cover, install the lower shuttle lever (3) at an approx. angle of 60°, toward the rear of the cover. This will engage the splines correctly. **NOTE:** Be careful not to damage seal.
3. Drive in the roll pin (16) to retain the lower shuttle lever in the cover. Install pipe plug (15).
4. Install detent spring (11), ball (10) and while compressing spring, start the shuttle rail (9) into cover.
5. Install the spacer (14) and lug (13) while driving the rail (9) into position.
6. Install shuttle fork (12) and retain fork (12) and hub (13) with setscrews (8). Make sure setscrews engage recess in rail and torque to 35 ft. lbs. **NOTE:** Make sure lockwire is not wedged between spacer and fork.
7. Selection of the proper spacer (14), which is available in thickness of .550", .531" and .562", can be done by moving the shuttle lever to the forward position with the detent ball seated in rail.
8. Using a feeler gauge check the clearance between spacer and housing (Inset A).
9. Install the longest spacer that will still give a clearance of .010". If this is not done, over shifting can result in damage to the shuttle unit.
10. Before installing the cover assembly, move the dual range lever rearward and the lower shuttle lever (3) forward. Move the dual range shift collar forward and the shuttle collar rearward. Make sure forks engage the shifting collars. Install cover with new gasket (7).
11. Install bolts (4) with lockwashers and torque to 35 ft. lbs.
12. Reconnect linkage assembly to shuttle lever (2) using bolt (1) with lockwasher.

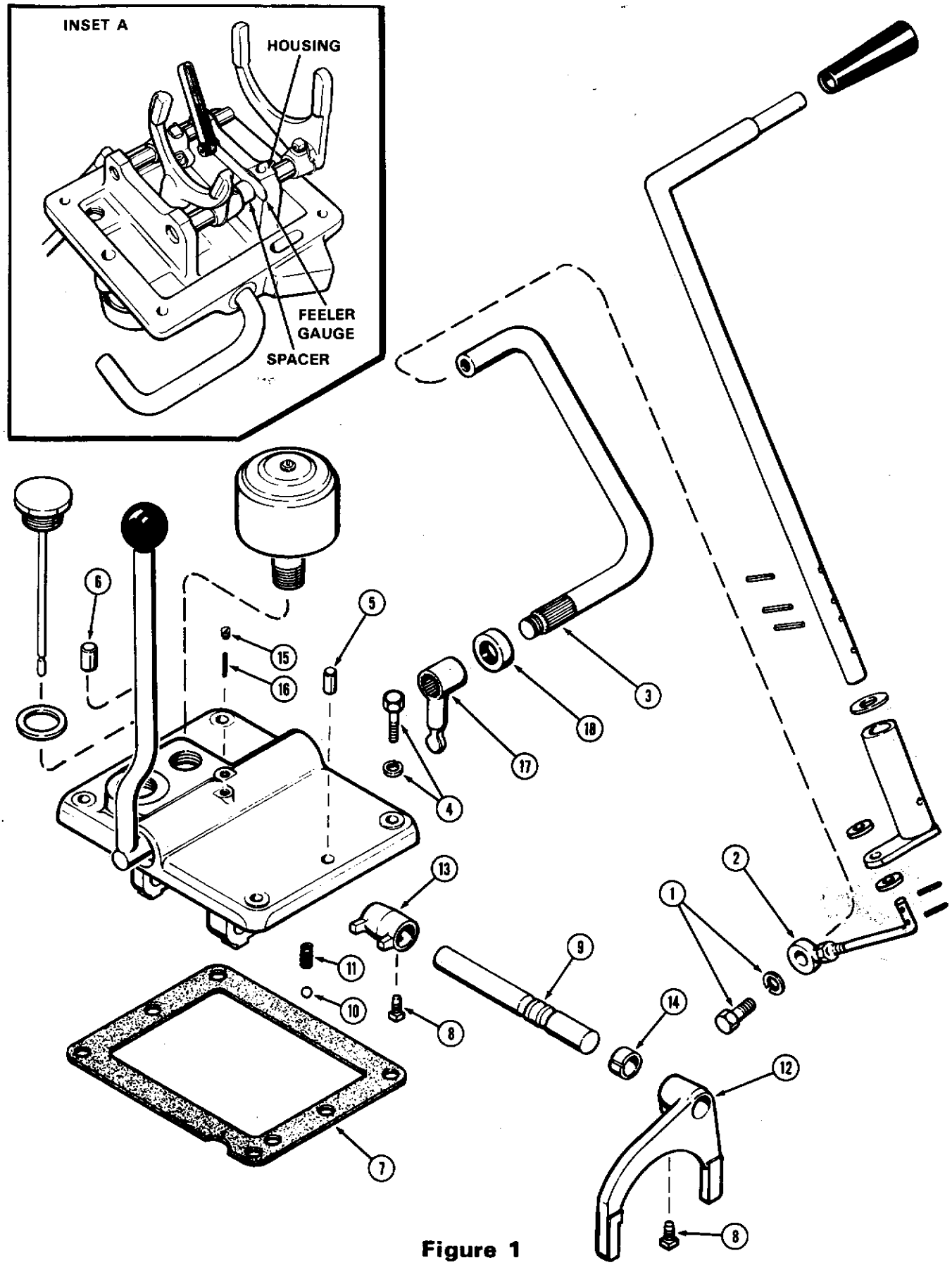
INSET A
HOUSING
FEELER
GAUGE
SPACER
1
2
3
4
5
6
7
8
9
10
11
12
13
14
15
16
17
18

Figure 1

SHUTTLE CONTROL COVER
With Direct Lever
(Refer to Figure 2)

There are two types of control covers used, one for tractors with shuttle only and one for tractors with shuttle and dual range. The servicing of the dual range part of the cover is covered in Section 67 of this Service Manual.

Removal and Disassembly

1. Remove breather (1), also breather tube (2) and breather tube nut (3) if equipped from cover.
2. Remove the four bolts (4) with lockwashers from cover.
3. Tap cover upward lightly to remove. The locating dowels (5) and (6) will remain in cover. Remove gasket (7).
4. Remove lockwires and setscrews (8). Drive the shuttle rail (9) out and remove detent ball (10), spring (11), fork (12), lug (13) and selective spacer (14).
5. Remove the pipe plug (15) in top of cover and using a punch , drive the roll pin (16) down and out of the cover.
6. The shuttle lever (19) is splined to the fork lever (17) and can be pulled out of cover.
7. Drive out lever seal (18).

Inspection

Inspect the shuttle fork, rail, fork lever and detent ball for excessive wear or roughness.

Inspect the detent spring (11).

Spring Specifications:

Total coils	8
Wire diameter	.072″
I.D. diameter	25/64″
Free length	1″
Compression to 13/16″	35 to 38 Lbs.

Assembly and Installation

1. Install new oil seal (18) with lip inward, until it bottoms in cover.
2. While holding fork lever (17) in a vertical position inside of cover, install shuttle lever (19) at approximately a right angle to the cover. This will engage the splines correctly. **NOTE:** Be careful not to damage the seal.
3. Drive in the roll pin (16) to retain the shuttle lever (19) in the cover. Install pipe plug (15).
4. Install detent spring (11), ball (10) and while compressing spring, start the shuttle rail (9) into cover.
5. Install the spacer (14) and lug (13) while driving the rail (9) into position.
6. Install shuttle fork (12) and retain fork (12) and hub (13) with setscrews (8). Make sure setscrews engage recess in rail and torque to 35 ft. lbs. **NOTE:** Make sure lockwire is not wedged between spacer and fork.
7. Selection of the proper spacer (14), which is available in thickness of .550″, .531″ and .562″ can be done by moving the shuttle lever to the forward position with the detent ball seated in rail.
8. Using a feeler gauge check the clearance between spacer and housing (Inset A).
9. Install the longest spacer that will still give a clearance of .010″. If this is not done, over shifting can result in damage to the shuttle unit.
10. Before installing the cover assembly, move the dual range lever rearward and the shuttle lever (19) forward. Move the dual range shift collar forward and the shuttle collar rearward. Make sure forks engage the shifting collars. Install cover with new gasket (7).
11. Install bolts (4) with lockwashers and torque to 35 ft. lbs.
12. Install breather tube (2) and nut (3) if equipped, and breather (1).

Installing Cover

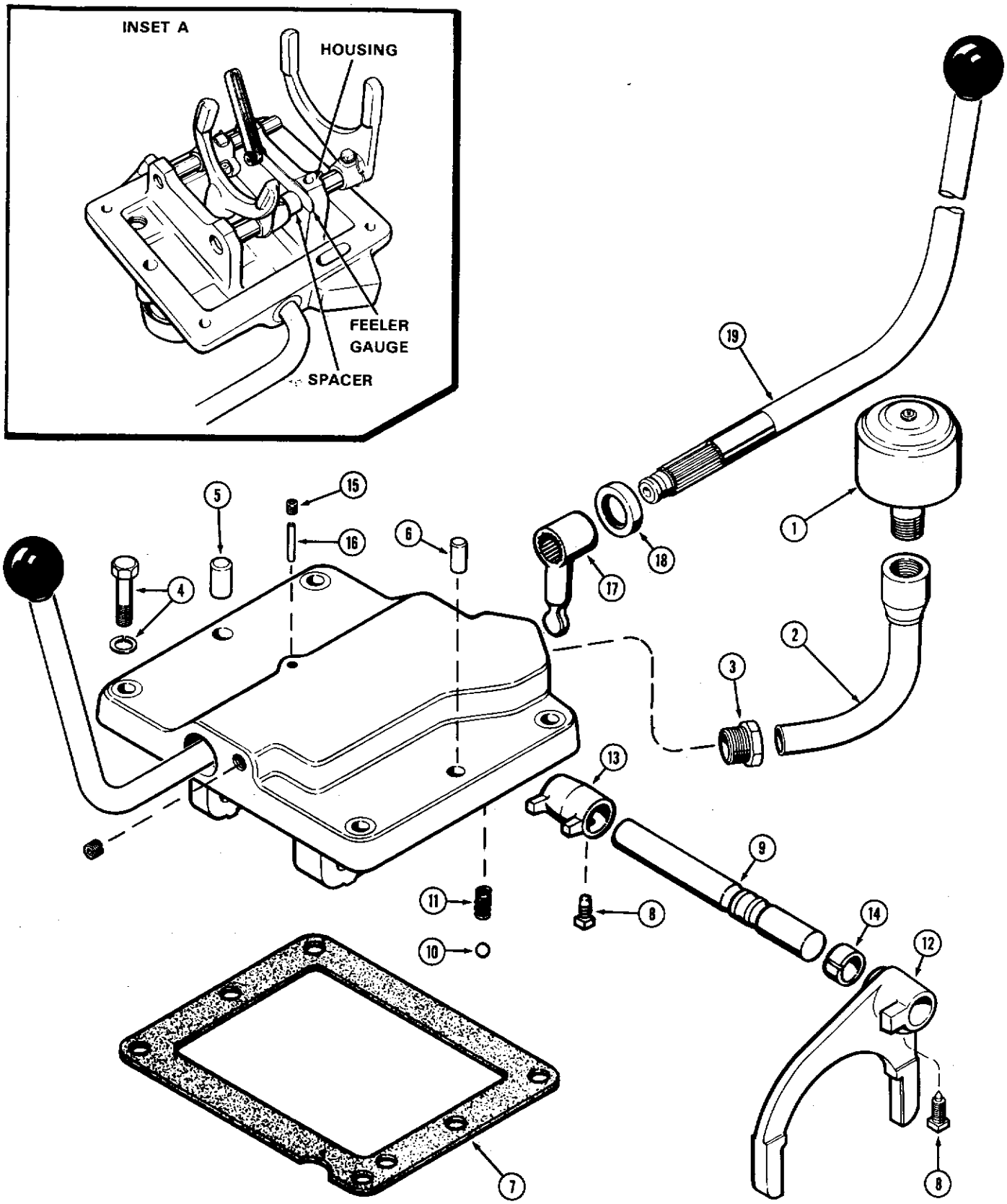
INSET A
HOUSING
FEELER
GAUGE
SPACER
1
2
3
4
5
6
7
8
9
10
11
12
13
14
15
16
17
18
19

Figure 2

SHUTTLE TRANSMISSION

(Refer to Figure 3)

Removal and Disassembly

For splitting the tractor between the torque tube and transmission case, follow the instructions as given in Section 92 of this Service Manual.

1. Remove the reverse idler stud nut (1). Use a brass rod and drive the stud (2) from the case (6). Leave idler gear assembly (2,3,4,5) in case until the shuttle gears are removed.
2. Remove bearing retainer bolts (7) with lockwashers and retainer (8).
3. Remove the input shaft (11) or (39).
4. Remove snap ring (9) bearing (10) and needle bearing (12) from input shaft (11) if they are to be replaced.
5. Remove snap ring (13) nuts or bolts that retain the shuttle unit to the dual range or transmission case. While moving the shuttle housing (6) forward, remove the synchronizer unit (14 thru 19), thrust collar (20), output gear (21) and sleeve (22).
6. Remove the pinned thrust collar (23).
7. Remove reverse idler gear assembly (2,3,4,5) from case. Remove snap ring (3) and press bearing (4) from gear (5) and shaft (2).
8. Remove countershaft bushing bolts (28) with lockwashers, countershaft lock (29), countershaft bushing (30) and shims (31) from case.
9. Pull countershaft (32) from case and remove countershaft gear (36), thrust bearings (34) and thrust washers (33) and (35).
10. Remove needle bearings (37) from countershaft gear (36) if they are to be replaced.
11. Remove expansion plug (38) from case if it has been leaking.
12. Disassembly of the synchronizer unit can be done by removing both the blocking rings (14 and 19), springs (15 and 17) and the shifter plates (18) from the hub-sleeve assembly (16).

Inspection

Thoroughly clean all parts before inspection. Replace damaged or worn parts.

Inspect the tapered surfaces of the input gear and output gear that makes contact with the synchronizer unit. These tapered surfaces must be free of nicks, burrs and foreign material. The blocking rings (14) and (19) must turn freely on the tapered surfaces, and if excessive wear is noted on the inside thread, they must be replaced.

Inspect the shift collar of the synchronizer unit where it makes contact with the shuttle fork, for excessive or uneven wear. This would be an indication that the shuttle fork is bent or cocked.

Inspect all the needle bearings and thrust bearings for wear, looseness or damage.

Inspect all gear teeth for wear or damage.

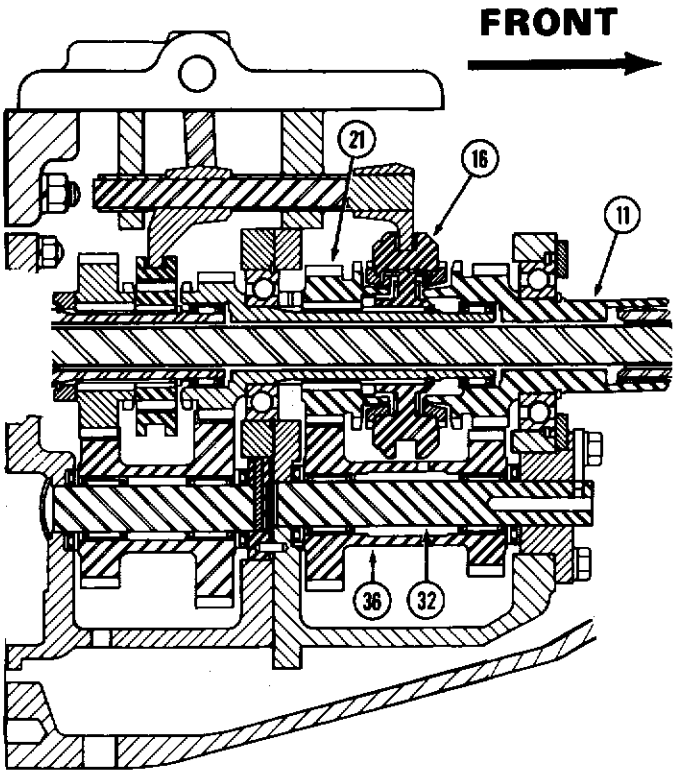

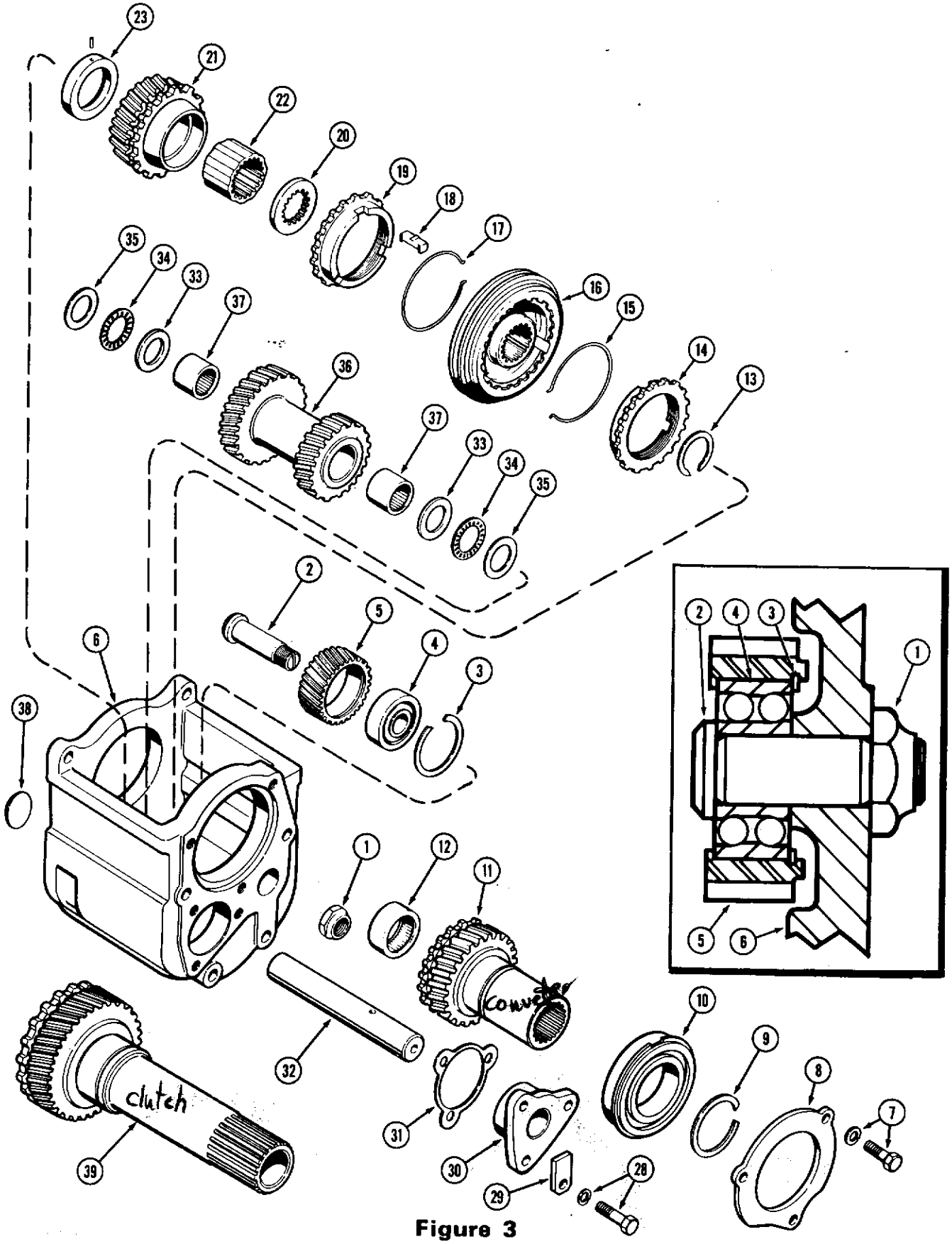
23
21
22
20
19
18
17
16
15
14
13
35
34
33
37
36
37
33
34
35
2
5
4
3
6
38
1
12
11
32
clutch
39
31
30
29
28
10
9
8
7
2
4
3
1
5
6

Figure 3

SHUTTLE TRANSMISSION

(Refer to Figure 4)

Assembly and Installation

1. Install new expansion plug (38) and start countershaft (32) into case.
2. Install needle bearings (37) into gear (36) using G15021 driver. Drive on the numbered edge of bearing until it is even with the chamfer. (Refer to Inset A.)
3. Lubricate the countershaft gear bearings. Install countershaft gear (36) on shaft (32) with a thick .125" thrust washer (33) on each side of gear. Install thrust bearing (34) and thin (.031") thrust washer (35) on each side of gear. Push shaft all the way into gear.
4. Install the same number of shims (31) that were removed, bushing (30), lock (29) and bolts (28) with lockwashers. Tighten bolts 15 to 20 ft. lbs. torque. Using feeler gauge between gear (36) and thrust washer (33) check for proper end play of .004" to .009". Remove or add shims (31) until proper end play is reached.
5. Press bearing (4) into idler gear (5) and install snap ring (3). Press idler gear and bearing assembly on to the idler shaft (2) with the snap ring side toward threaded end of shaft. Lay this idler shaft assembly in the shuttle case (6) in its proper position, but do not install until after input gear is installed.
6. Assemble the synchronizer unit as follows: Install three shifter plates (18) and retain in place with springs (15 and 17). Install blocking rings (14 and 19) to hub-sleeve assembly (16).
7. Install thrust collar (23) with pin (24) engaging spline in shaft.
8. Install new gasket between the shuttle housing and transmission case. No gasket is used between shuttle housing and dual range housing. Be sure gasket is not reversed or oil transfer between torque tube and transmission can result. While installing shuttle housing, install sleeve (22), output gear (21) collar (20) and synchronizer unit (16) with the 5/16" hub toward front of case. **NOTE:** rear hub is 7/16" high.
9. Select the proper snap ring (13) to give the synchronizer unit a minimum of end play. This snap ring is available in .076" .080", .083", .087" and .091" thickness. Install the proper snap ring (13) onto the shaft.
10. Press new needle bearing (12) into input gear (11) using driver G15042. Use the proper end of the driver and press on the numbered side of the bearing. (Refer to Inset B.) The driver will allow the bearing to stop at a point inside of the input gear, so that the oil hole is open to the bearing and it will allow for proper lubrication.
11. Press bearing (10) on to input shaft and retain with snap ring (9).
12. Install input shaft (11) or (39), retainer (8), bolts (7) with lockwashers and tighten 35 to 40 ft. lbs.
13. Position the idler gear shaft assembly in its proper opening in case. Install nut (1) and tighten securely. Stake nut to shaft.
14. Reassemble the tractor and fill torque tube to proper level with Case TCH oil.

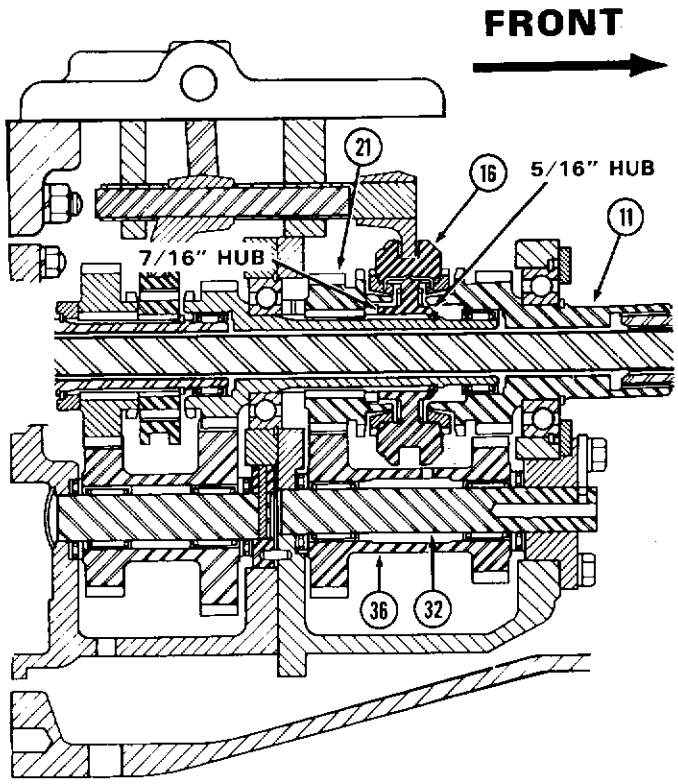

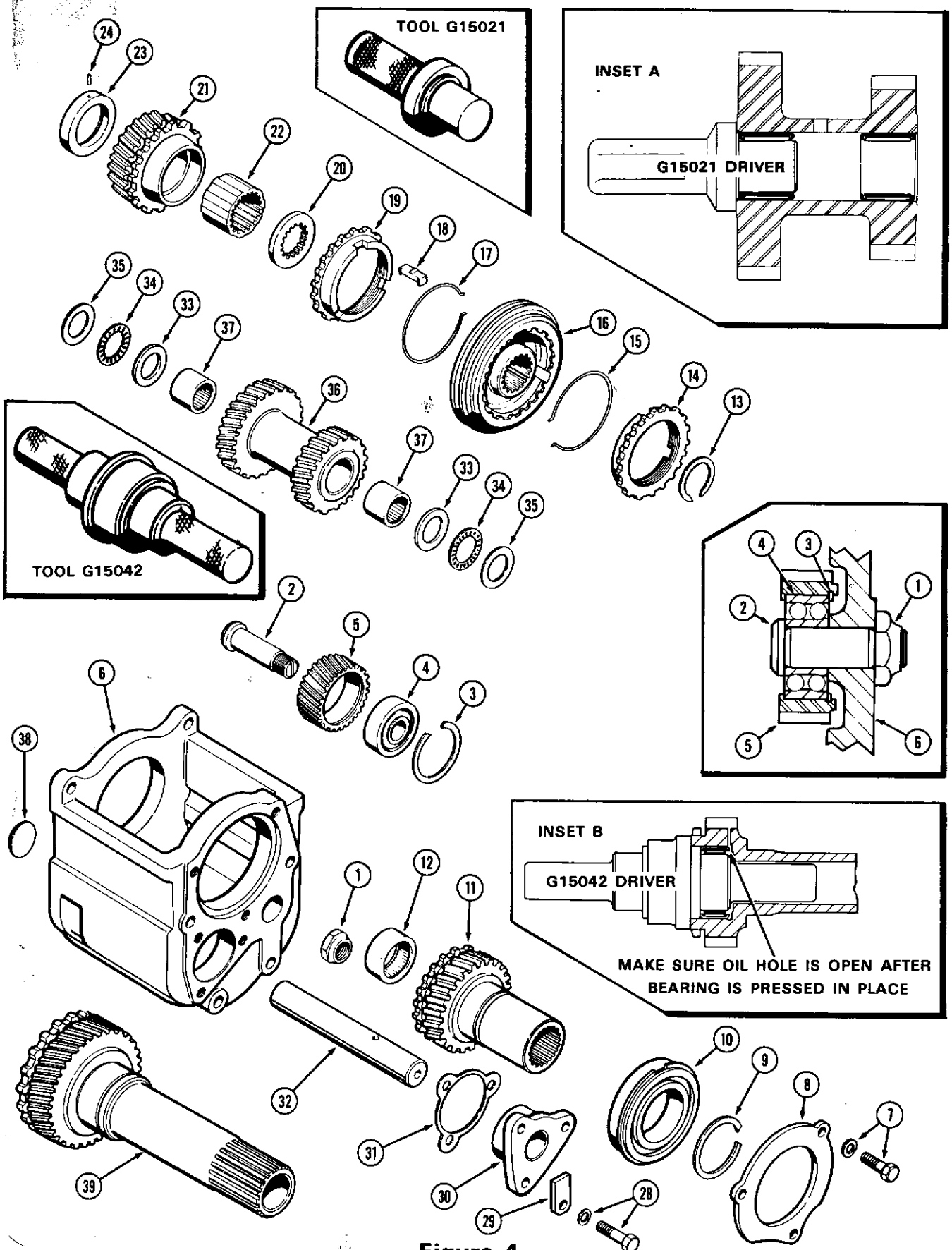
TOOL G15021
INSET A
G15021 DRIVER
TOOL G15042
INSET B
G15042 DRIVER
MAKE SURE OIL HOLE IS OPEN AFTER BEARING IS PRESSED IN PLACE

Figure 4